CML Microcircuits

COMMUNICATION SEMICONDUCTORS

High Resolution Circuit Diagrams for PE0601-7261, 7262

August 2012

Complimentary to CML User Manual: UM/0601/2

©2012 CML Microcircuits UK Ltd

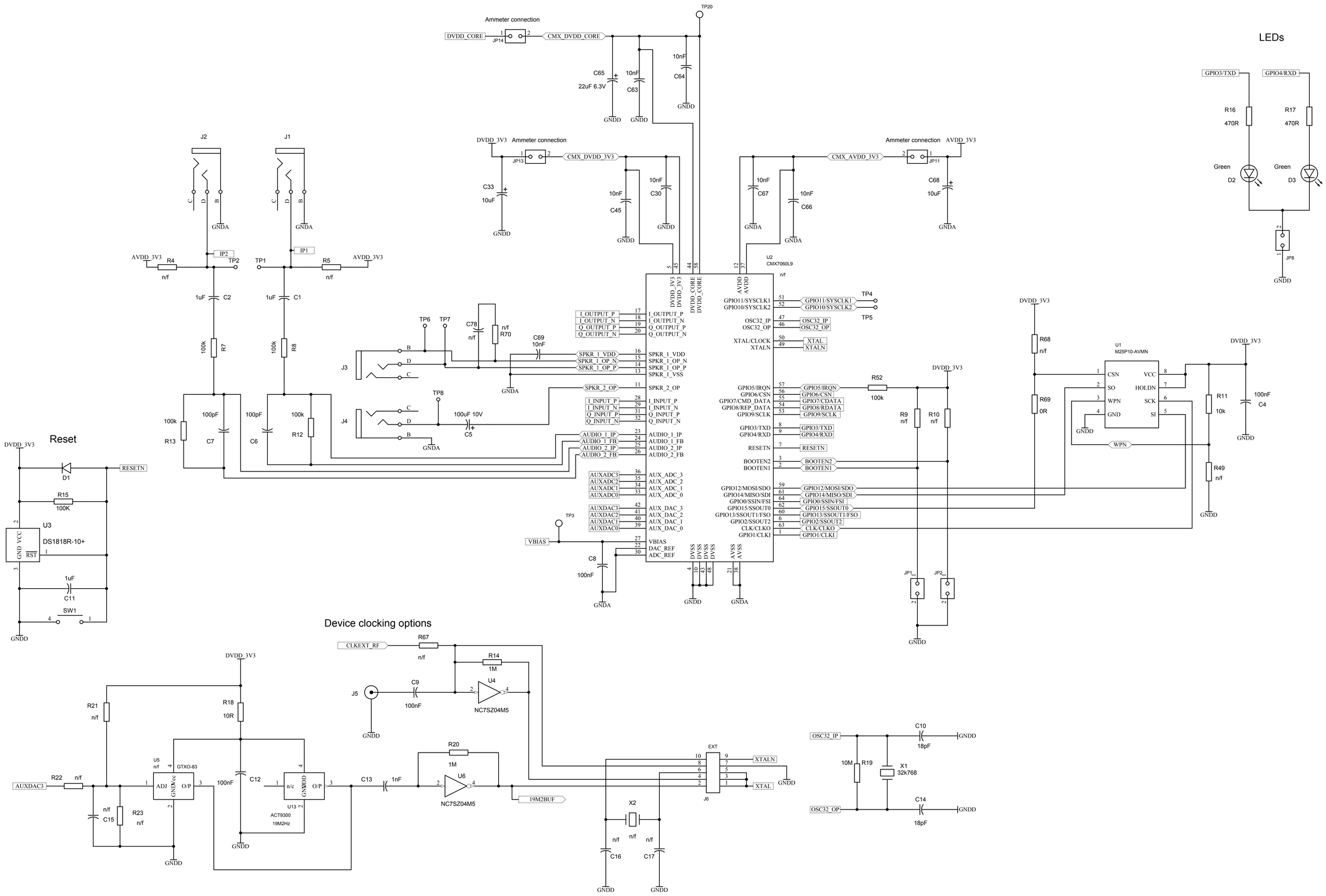

PE0601-7261, 7262, Sheet 1

PE0002 Connector (C-BUS Slave)

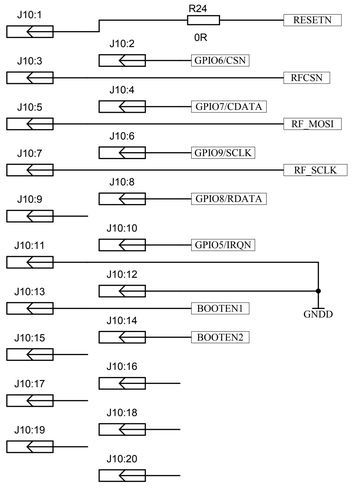

GPIO/SSP Connector

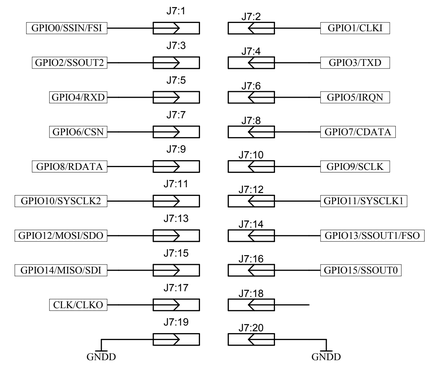

Radio Interface

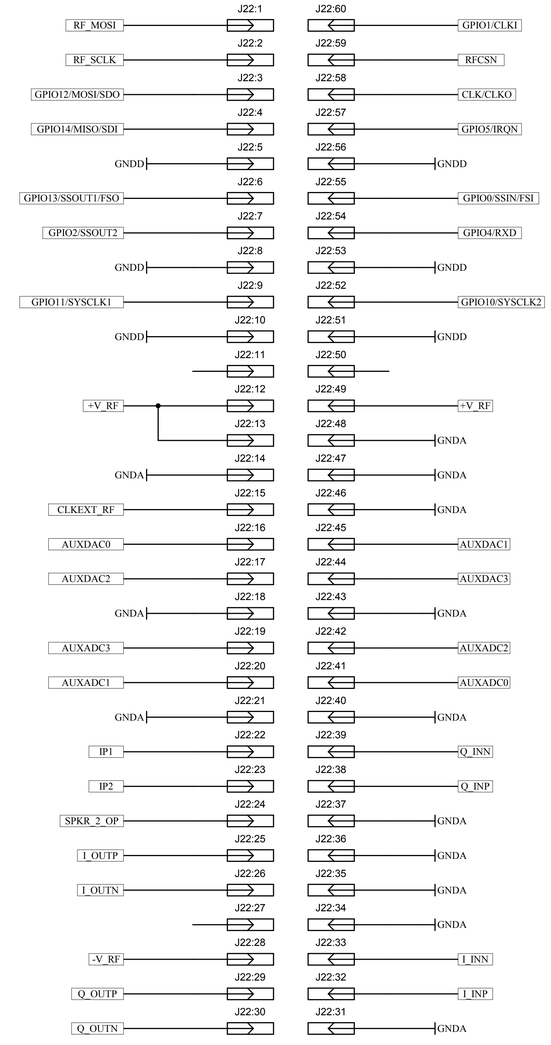

SSP Connector 2 (C-BUS Master)

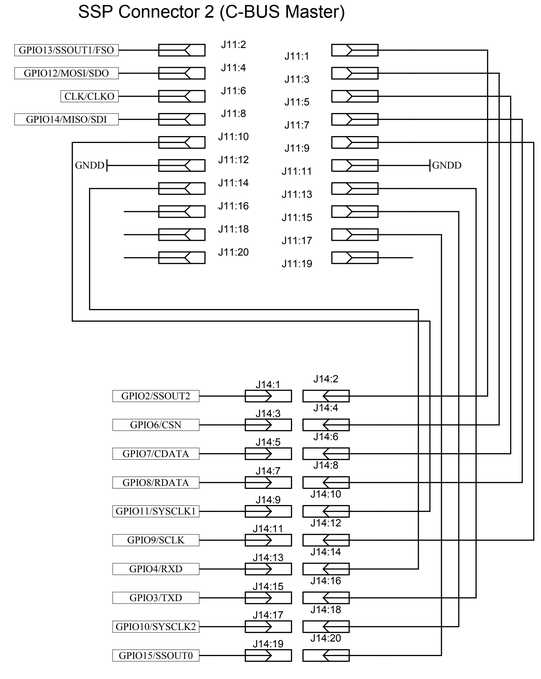

Audio Connector

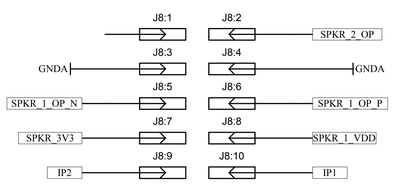

AUXDAC/AUXADC Connector

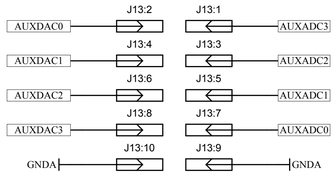

Signal Routing Jumpers

PE0601-7261, 7262, Sheet 2

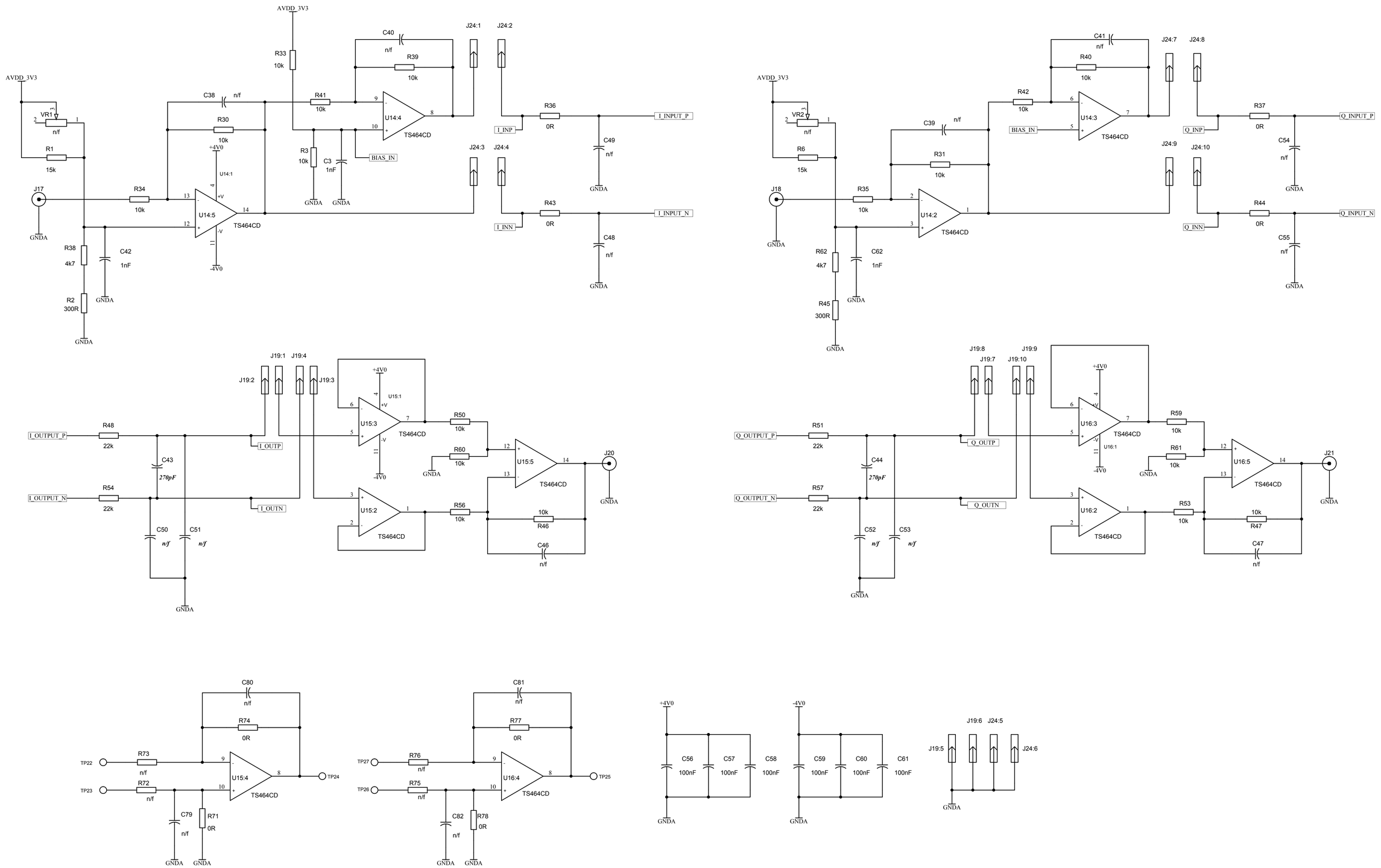

PE0601-7261, 7262, Sheet 3

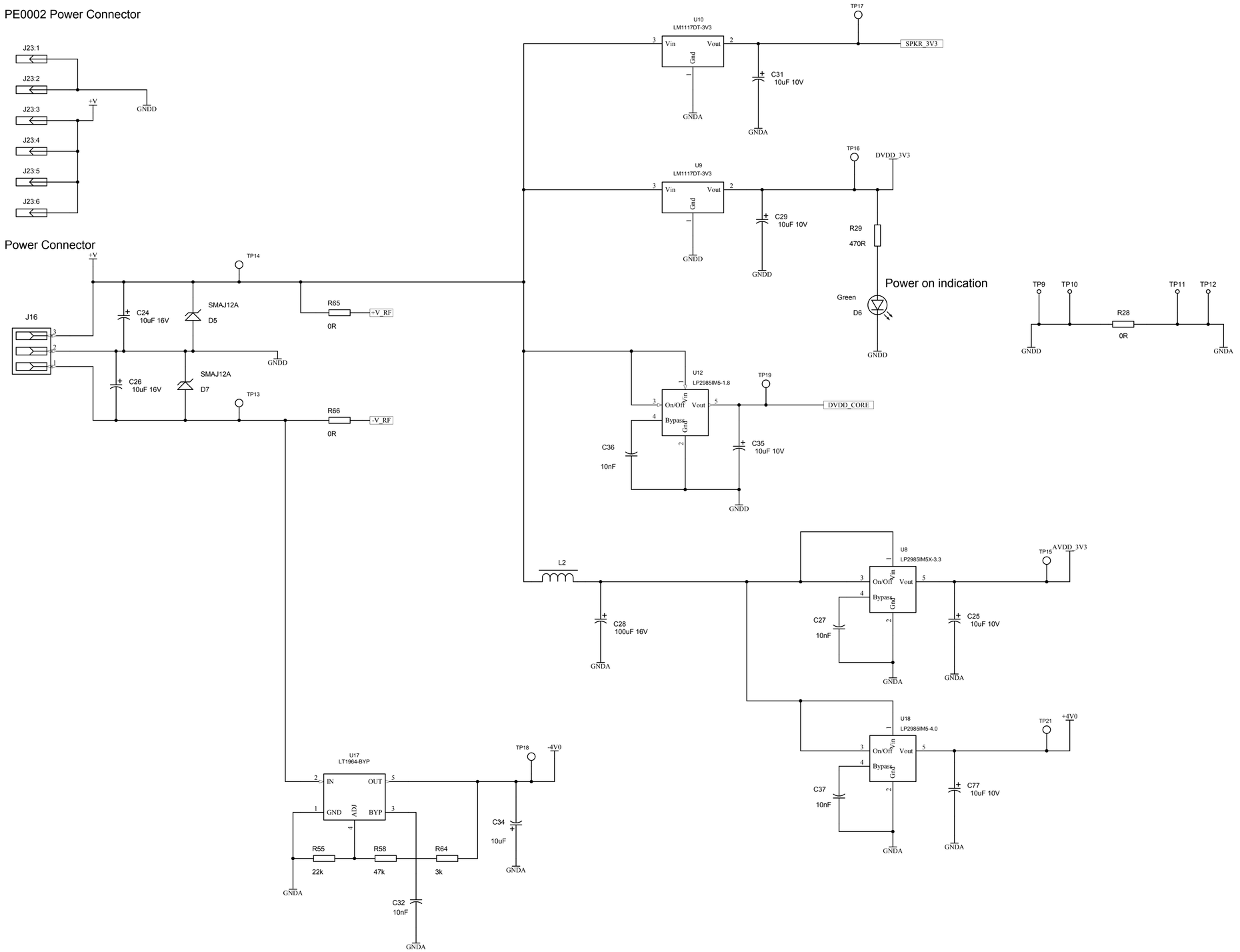

PE0601-7261, 7262, Sheet 4